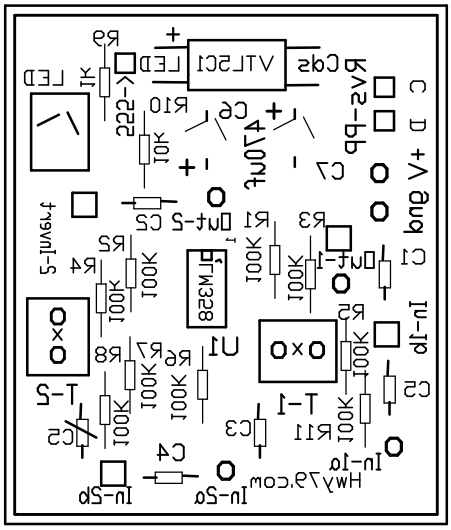Signal Inverter Amplifier