New_job (Visible layers) Scale=1.00 Fri May 03 12:06:04 2019

Phoenix 2020 Volume Board

Drill File = #22 - 4mm - .157″ #52 - 1.6mm - .0635″

#65 - .9mm - .0354″ #56 - 1.2mm - .045″

75mm x 200mm

Outline = 8cm x 20.7cm

Center your board within the oversized outline

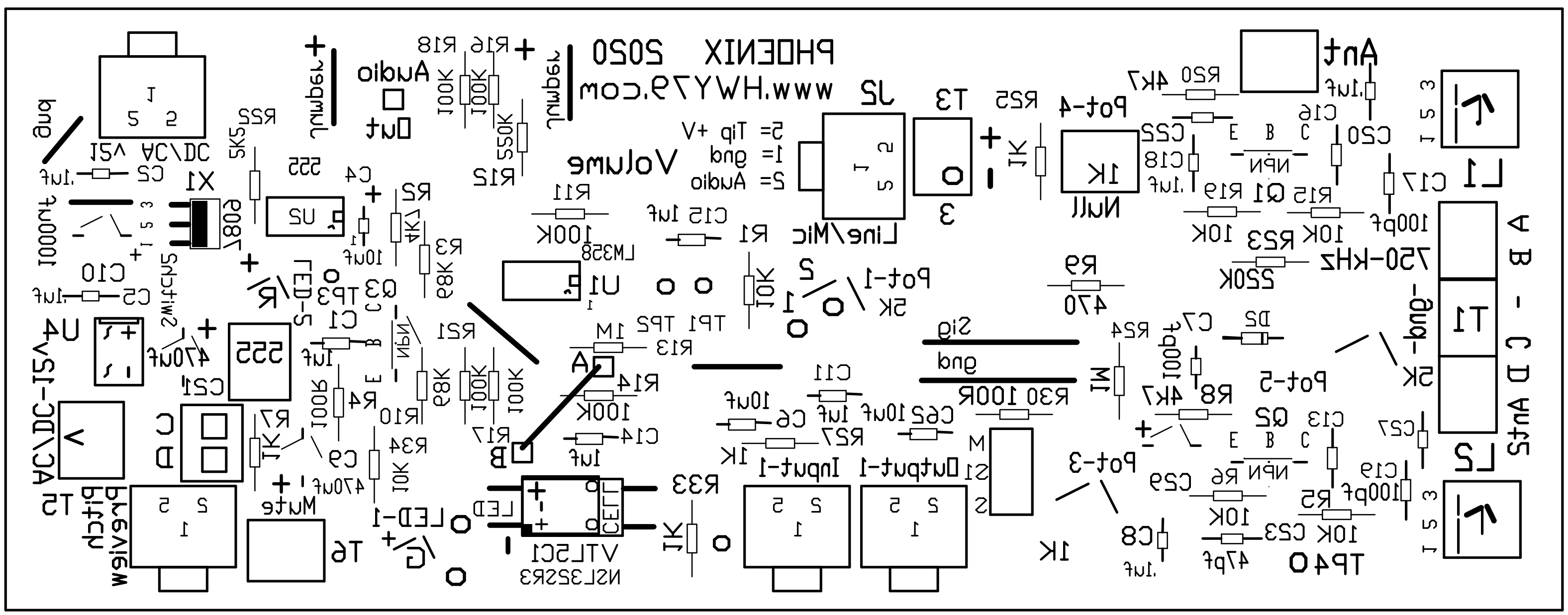

Bottom Silkscreen

Friday, May 03, 2019