PITCH BOARD

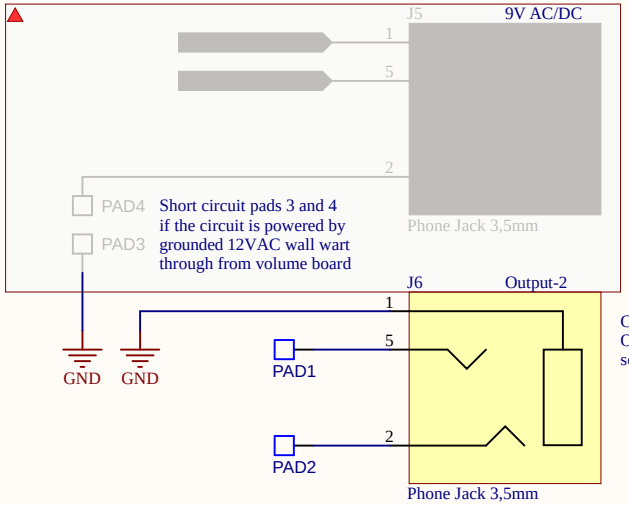

Connection for an accessory
Output from NE555 or unmodified
sound before transformer can be fed here

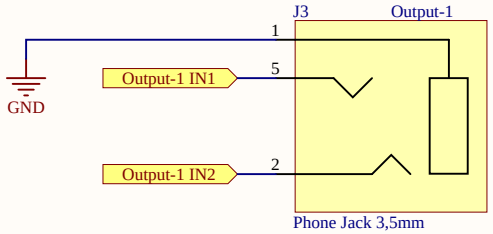

VOLUME BOARD

This connector should be
replaced by a standard power
connector.
TRS jack is not really
appropriate for supplying
power

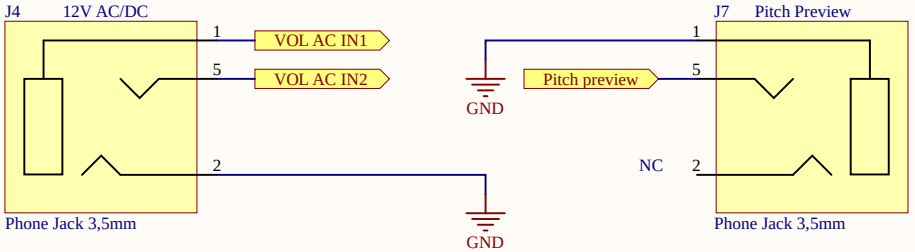

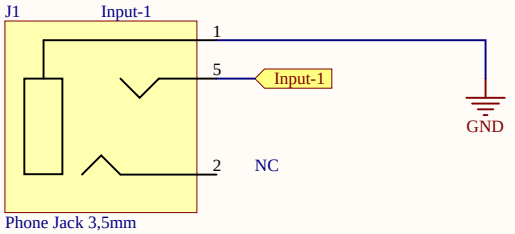

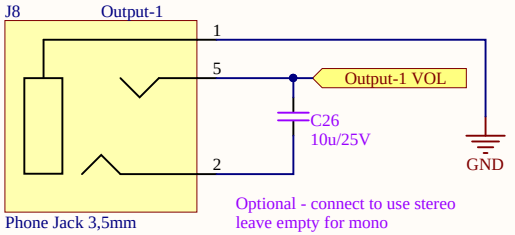

Optional - connect to use stereo
leave empty for mono

Title: Phoenix Theremin 2020 - Front panel		
Size: A4	Number: Humorous words of wisdom ...	Revision: 1.07.19A
Date: 21. 01. 2019		Sheet of
File: H:\FAKS\..\FrontPanel.SchDoc		Drawn By:

Volume board

Pitch board

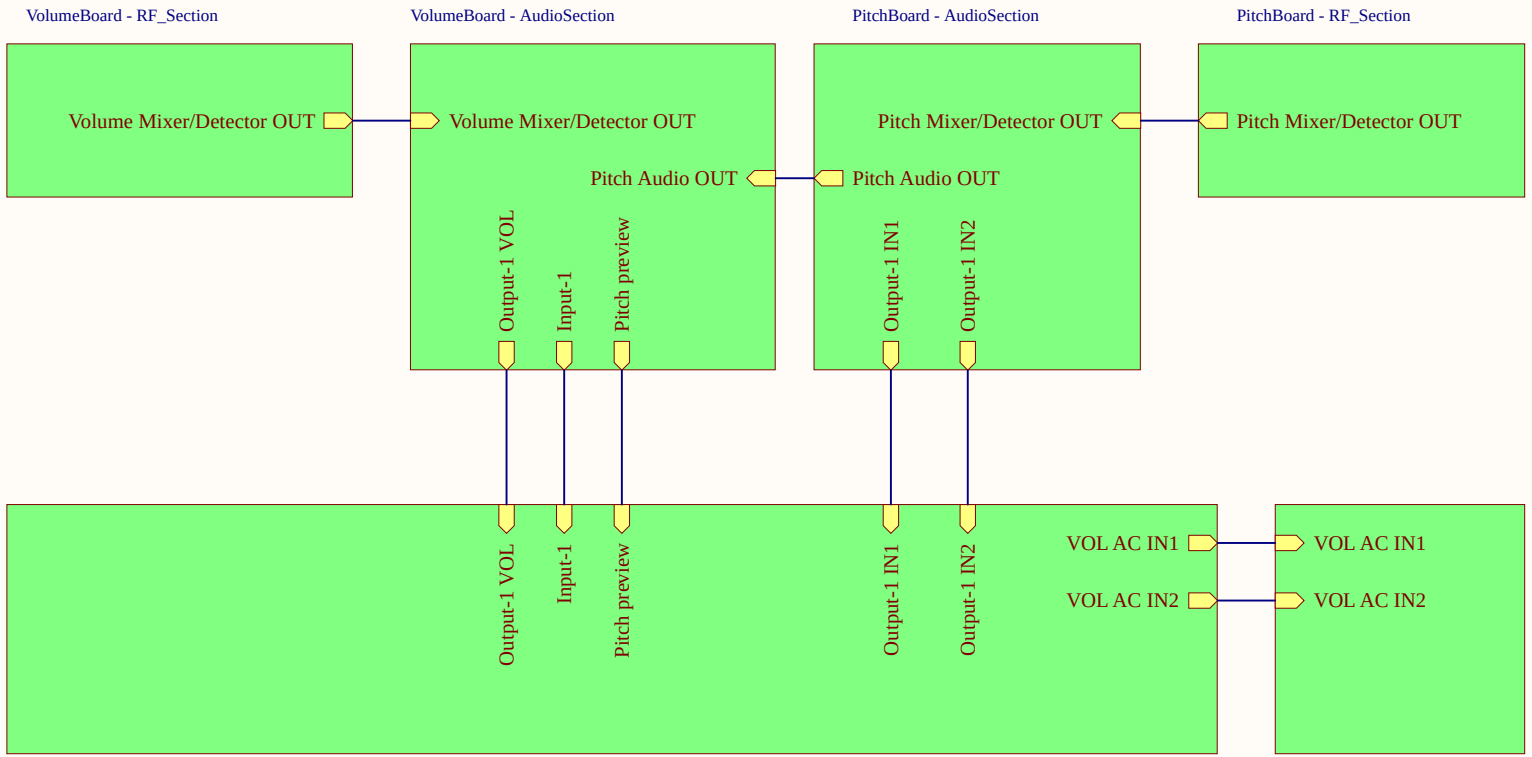

Power ports for pitch board are not mandatory and are only needed in the case of pitch board being used separately, withot the volume board.
In that case the pitch board needs it's own power supply.

Front panel connections

Power supply

This field will be edited once I figure out how to change the layout of the black area

Title		
Size: A4	Number	Revision
Date: 21. 01. 2019		Sheet of
File: H:\FAKS\..\Phoenix.SchDoc		Drawn By:

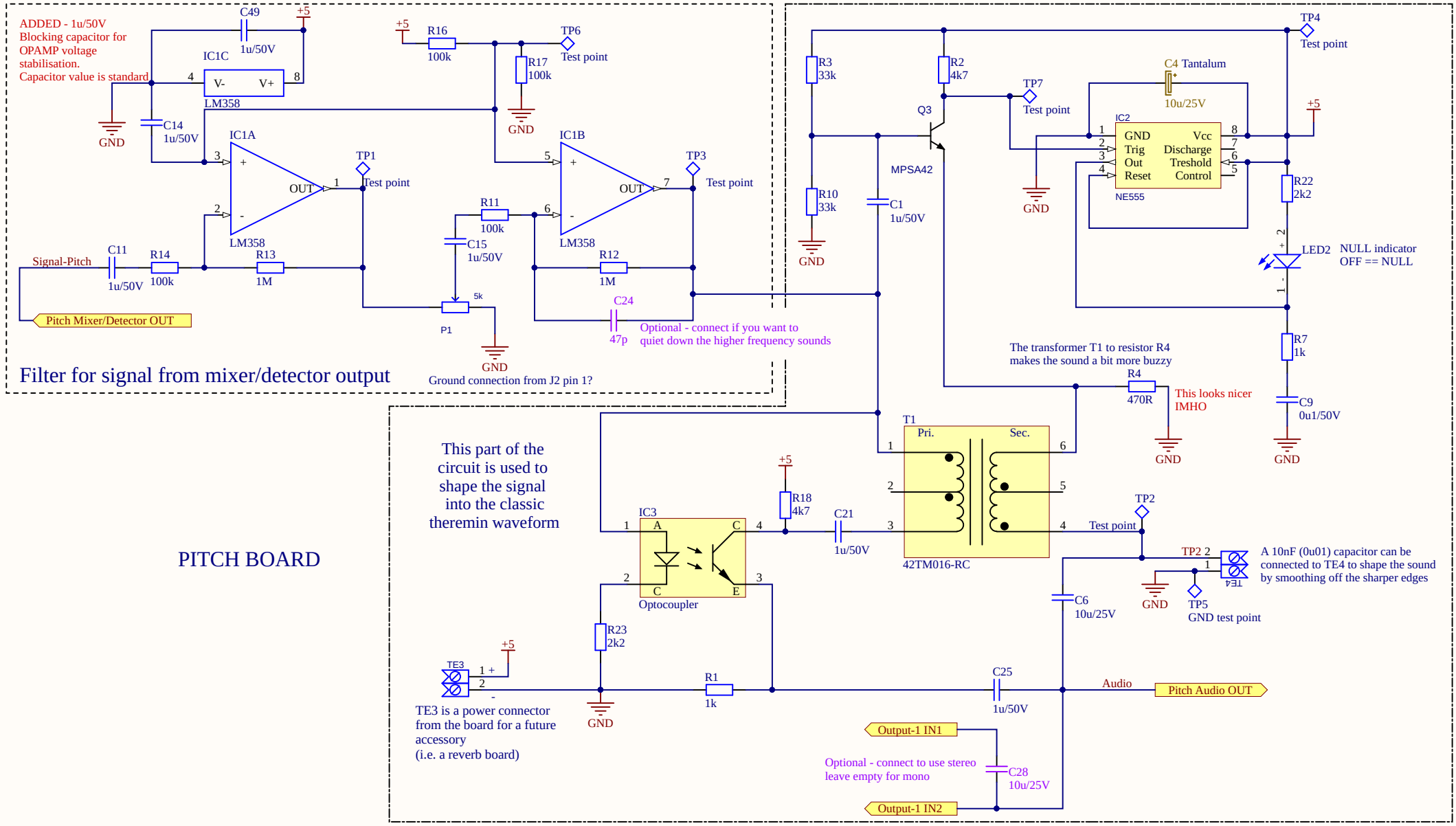
ADDED - 1u/50V
Blocking capacitor for
OPAMP voltage
stabilisation.
Capacitor value is standard
C49
1u/50V
+5
IC1C
LM358
C14
1u/50V
GND
R16
100k
TP6
Test point
R17
100k
IC1A
IC1B
TP1
TP3
OUT
LM358
R11
100k
C15
1u/50V
R12
1M
R13
1M
R14
100k
C11
1u/50V
Signal-Pitch
Pitch Mixer/Detector OUT
P1
5k
C24
47p
Optional - connect if you want to
quiet down the higher frequency sounds
Ground connection from J2 pin 1?
Filter for signal from mixer/detector output
R3
33k
R2
4k7
Q3
MPSA42
R10
33k
C1
1u/50V
TP7
TP4
C4 Tantalum
10u/25V
IC2
NE555
GND
Trig
Out
Reset
Discharge
Treshold
Control
R22
2k2
LED2
NULL indicator
OFF == NULL
R7
1k
C9
0u1/50V
The transformer T1 to resistor R4
makes the sound a bit more buzzy
R4
470R
This looks nicer
IMHO
This part of the
circuit is used to
shape the signal
into the classic
theremin waveform
T1
Pri.
Sec.
42TM016-RC
IC3
Optocoupler
R18
4k7
C21
1u/50V
TP2
Test point
TP2 2
1
TE4
A 10nF (0u01) capacitor can be
connected to TE4 to shape the sound
by smoothing off the sharper edges
C6
10u/25V
TP5
GND test point
R23
2k2
TE3
TE3 is a power connector
from the board for a future
accessory
(i.e. a reverb board)
R1
1k
C25
1u/50V
Audio
Pitch Audio OUT
Output-1 IN1
Optional - connect to use stereo
leave empty for mono
C28
10u/25V
Output-1 IN2
PITCH BOARD
Title
Phoenix Theremin 2020 - Pitch board, audio section
Size
A4
Number
... from our faculty:
Revision
1.07.19A
Date:
21. 01. 2019
Sheet
of
File:
H:\FAKS\..\PitchBoard - AudioSection.Sch
Drawn By:

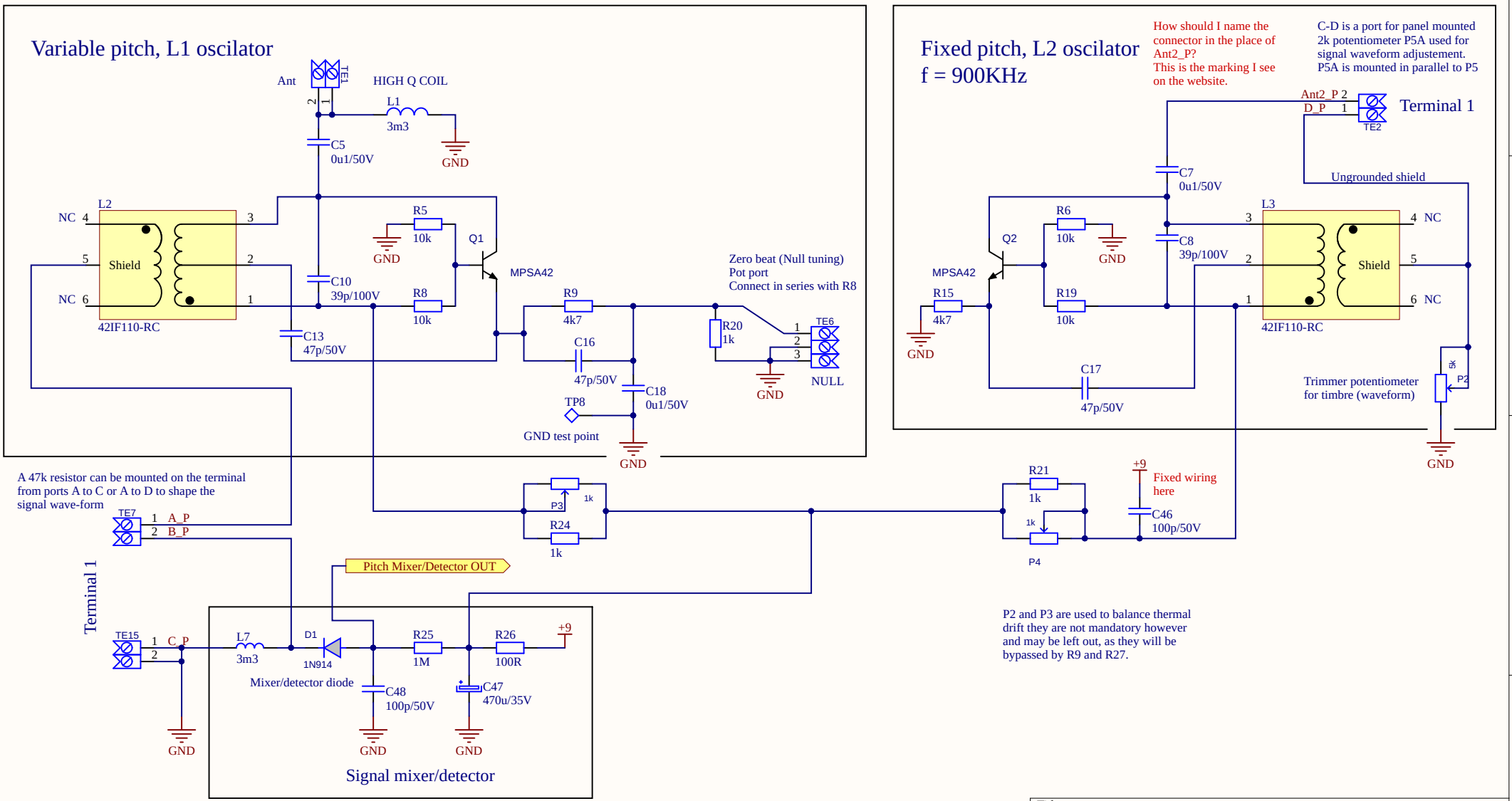

Title	Phoenix Theremin 2020 - Pitch board, RF section	
Size: A4	Number: Theoretically speaking, ...	Revision: 1.07.19A
Date: 21. 01. 2019	Sheet of	
File: H:\FAKS\..\PitchBoard - RF_Section.SchDoc	Drawn By:	

This part of the circuit is placed on the pitch board

C10 is not used if Volume board is connected

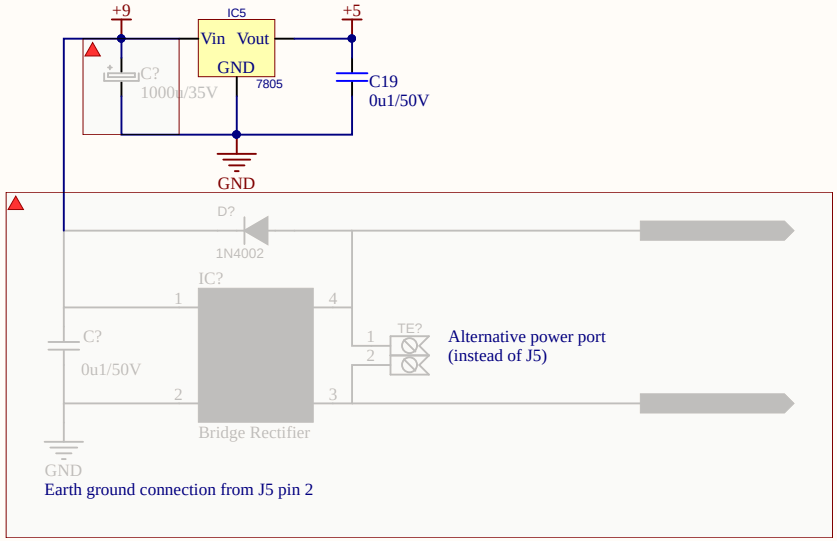

I will remove the greyed out areas.
I will however, make a separate schematic for the 2 board variant and leave the appropriate parts of the circuit on the schematic.

This part of the circuit is placed on the volume board

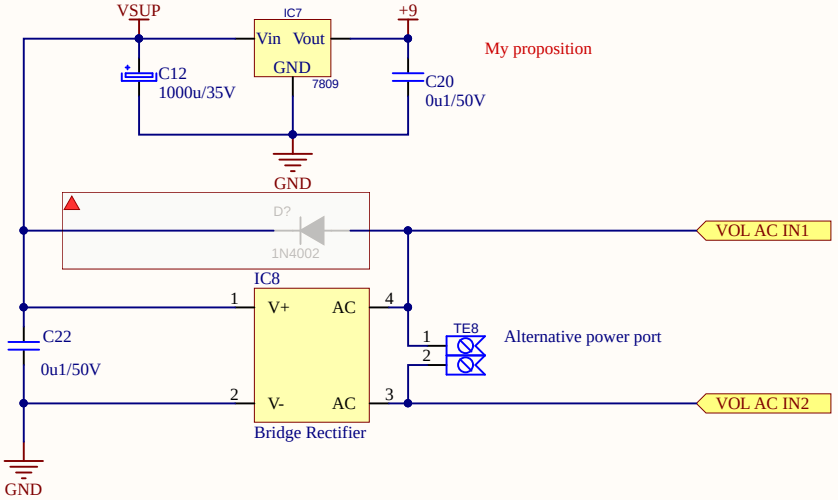

Earth ground connection from J4 pin 2

FIDUCIAL MARKS -
they play no role in how the circuit works whatsoever.
They are used if anyone intends to send gerber files to a company that produces printed circuit boards so the machines that etch the board (and possibly place the parts) can orient what is their position over the board.

They are seen in the corners of the PCB, placed on top (red) side.

I still see this and it doesn't look right to me.
Did you forgot to reupload a new image
Or is this intended?

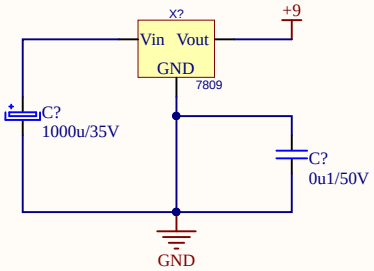

Title: Phoenix Theremin 2020 - Power supply		
Size: A4	Number: ... practice and theory ...	Revision: 1.07.19A
Date: 21. 01. 2019		Sheet of
File: H:\FAKS\..\PowerSupply.SchDoc		Drawn By:

VOLUME BOARD

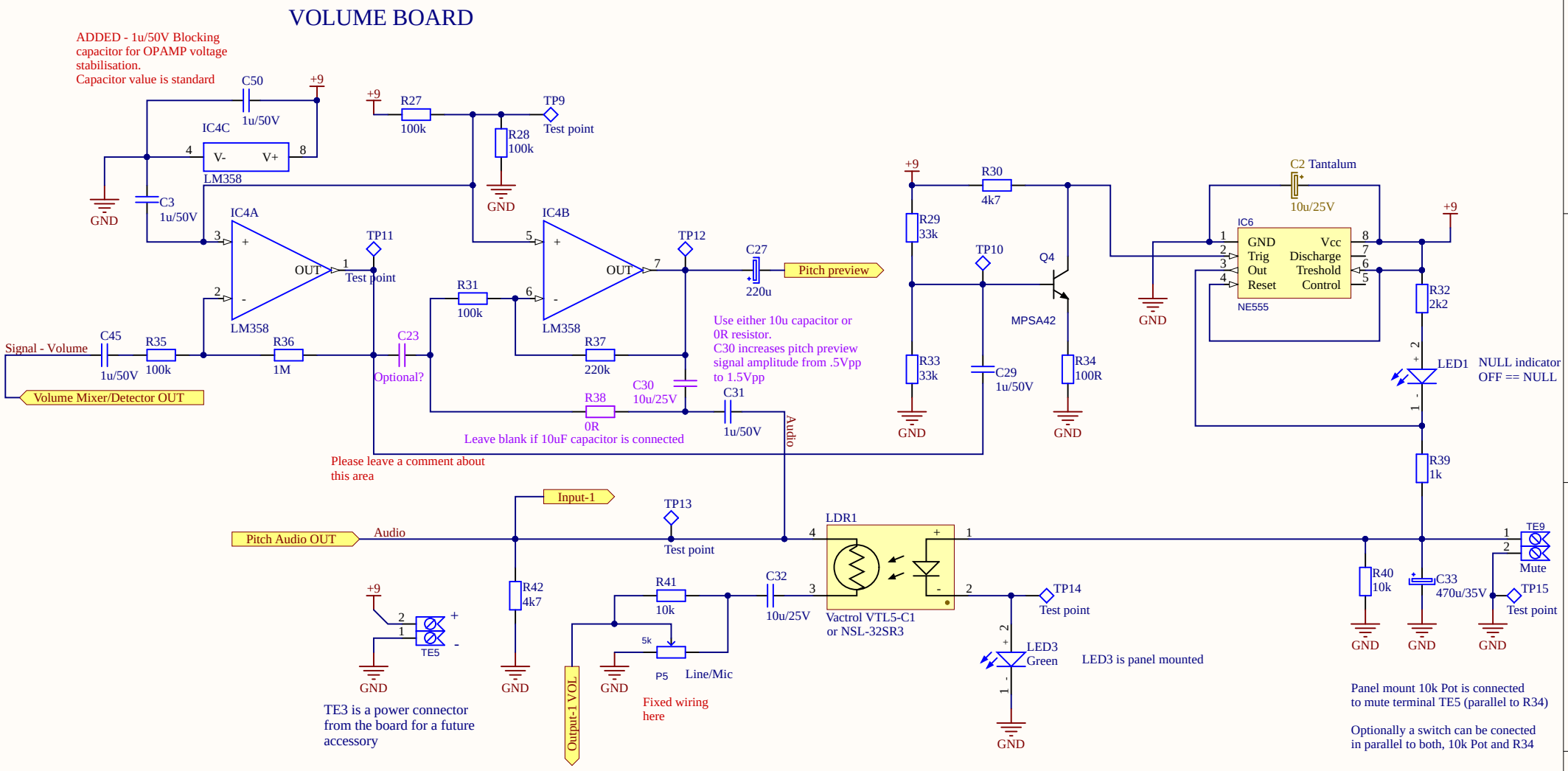

VOLUME BOARD

Title	Phoenix Theremin 2020 - Volume board, Audio section	
Size: A4	Number: ... are both ...	Revision: 1.07.19A
Date: 21. 01. 2019		Sheet of
File: H:\FAKS\..\VolumeBoard - AudioSection.SchDoc		Drawn By:

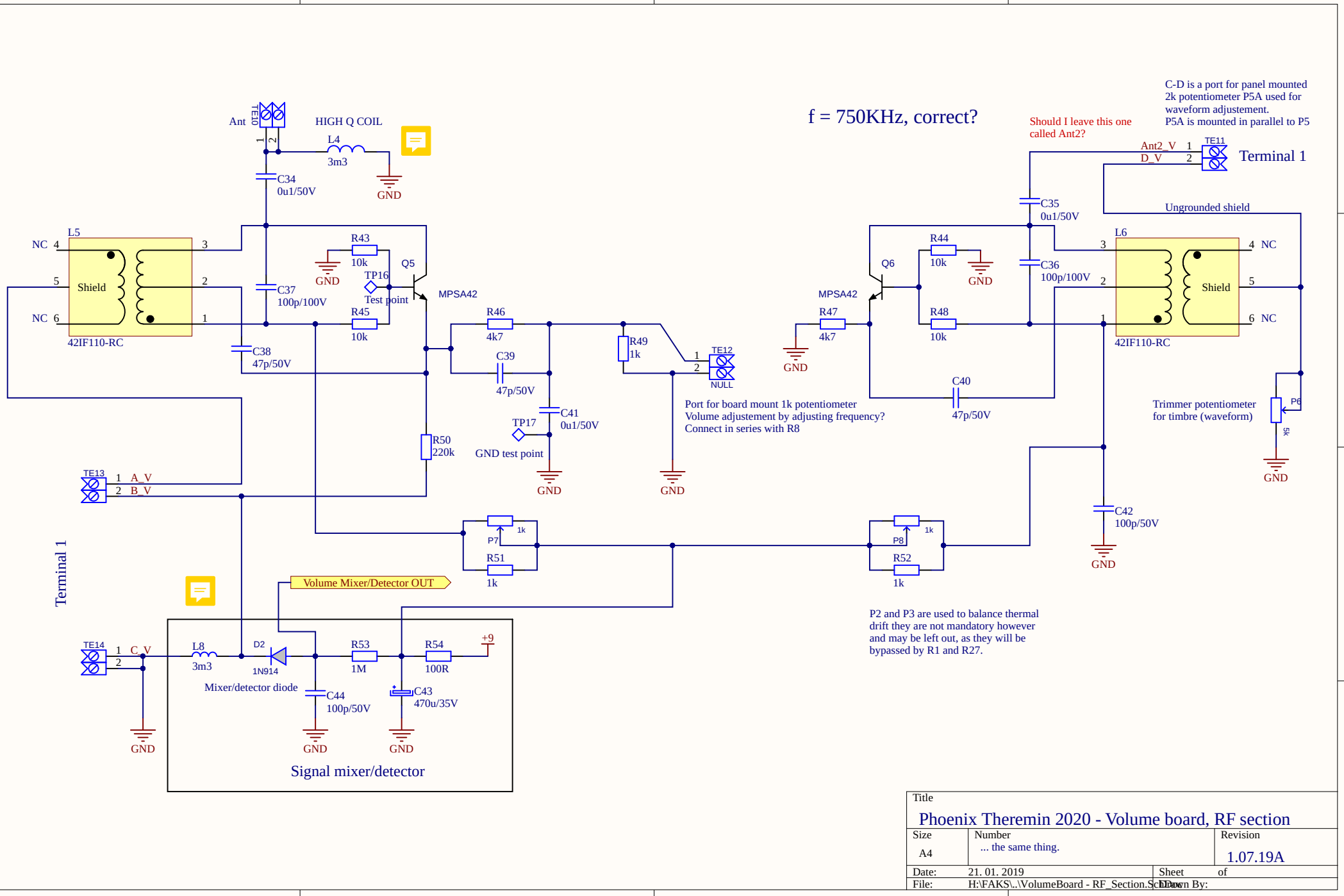

Title	Phoenix Theremin 2020 - Volume board, RF section	
Size: A4	Number: ... the same thing.	Revision: 1.07.19A
Date: 21. 01. 2019	Sheet of	
File: H:\FAKS\..\VolumeBoard - RF_Section.SchDoc	Drawn By:	

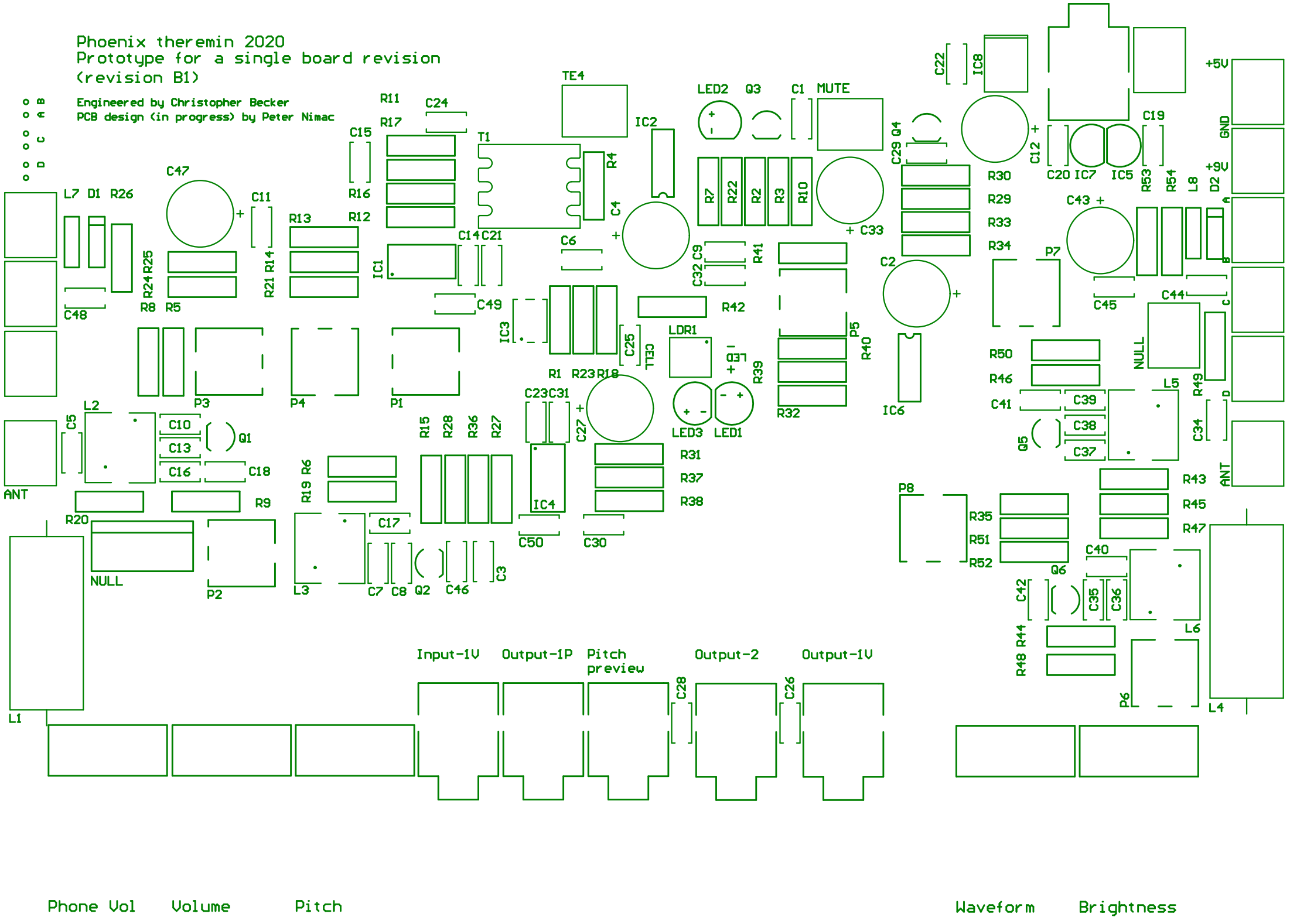
Phoenix theremin 2020
Prototype for a single board revision
(revision B1)
Engineered by Christopher Becker
PCB design (in progress) by Peter Nimac
Input-1V
Output-1P
Pitch preview
Output-2
Output-1V
Phone Vol
Volume
Pitch
Waveform
Brightness
+5V
GND
+9V
ANT
NULL
TE4
LED2
Q3
C1
MUTE
IC2
T1
IC1
IC3
IC4
IC5
IC6
IC7
IC8
LDR1
LED1
LED3
P1
P2
P3
P4
P5
P6
P7
P8
L1
L2
L3
L4
L5
L6
L7
L8
D1
D2
Q1
Q2
Q3
Q4
Q5
Q6
C47
C48
C49
C50
C46
C30
C33
C2
C43
C44
C45
C19
C20
C22
C12
C29
C28
C26
C27
C25
C23
C31
C32
C9
C14
C21
C15
C24
C11
C10
C13
C16
C18
C17
C7
C8
C3
C5
C4
C6
C41
C39
C38
C37
C40
C42
C35
C36
C34
C49
R1
R2
R3
R4
R5
R6
R7
R8
R9
R10
R11
R12
R13
R14
R15
R16
R17
R18
R19
R20
R21
R22
R23
R24
R25
R26
R27
R28
R29
R30
R31
R32
R33
R34
R35
R36
R37
R38
R39
R40
R41
R42
R43
R44
R45
R46
R47
R48
R49
R50
R51
R52
R53
R54
R55
CELL
LED

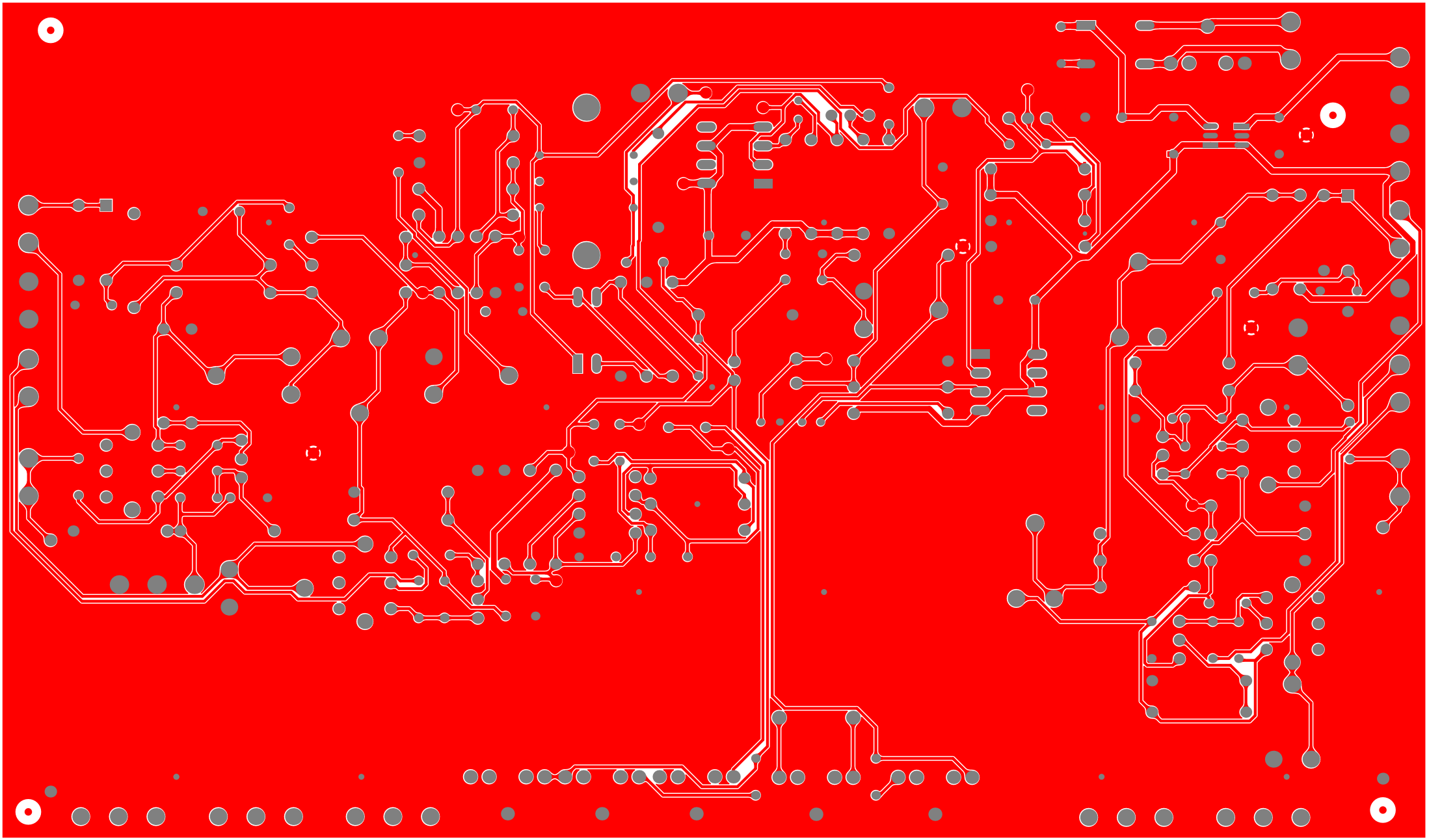

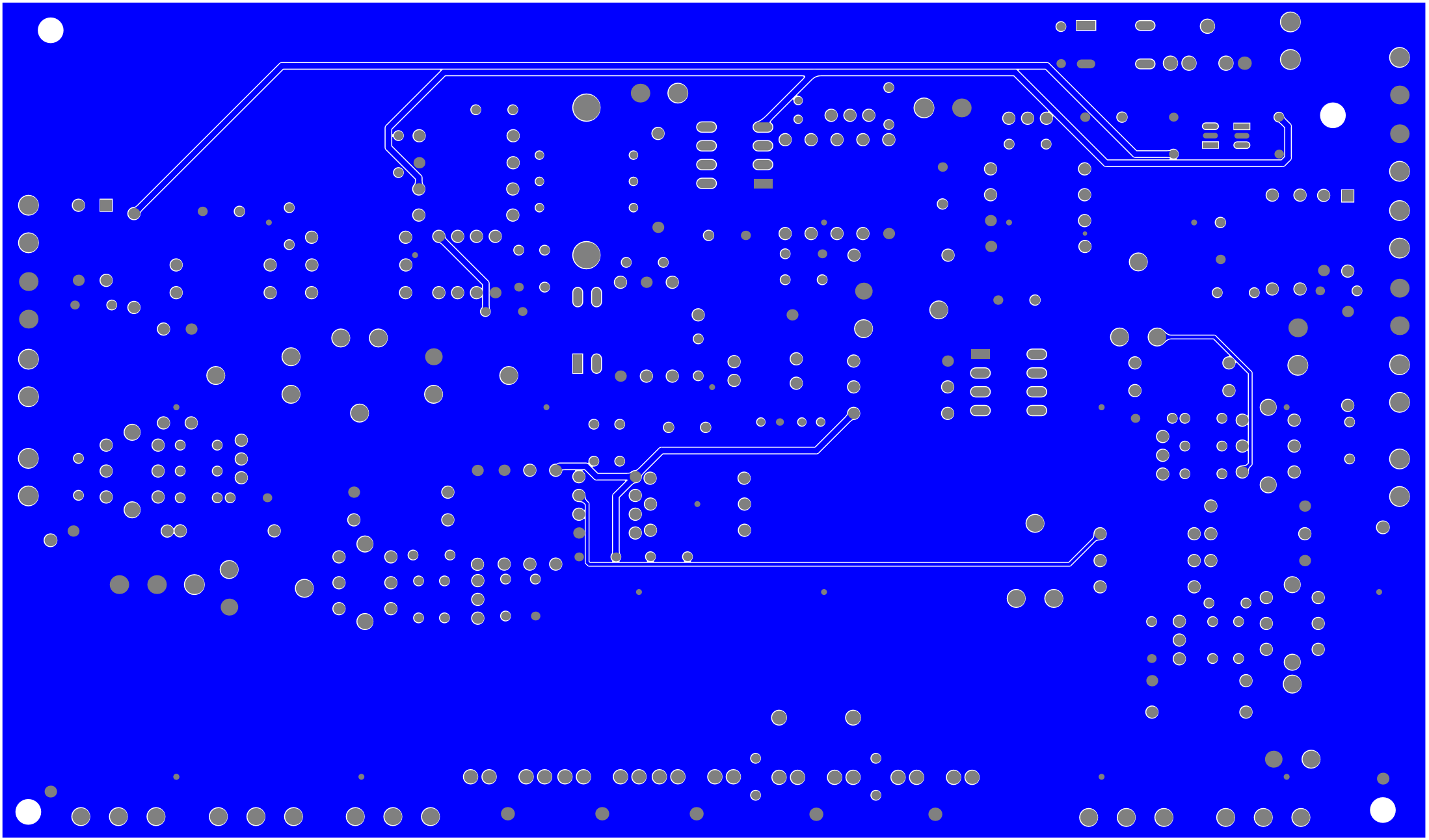

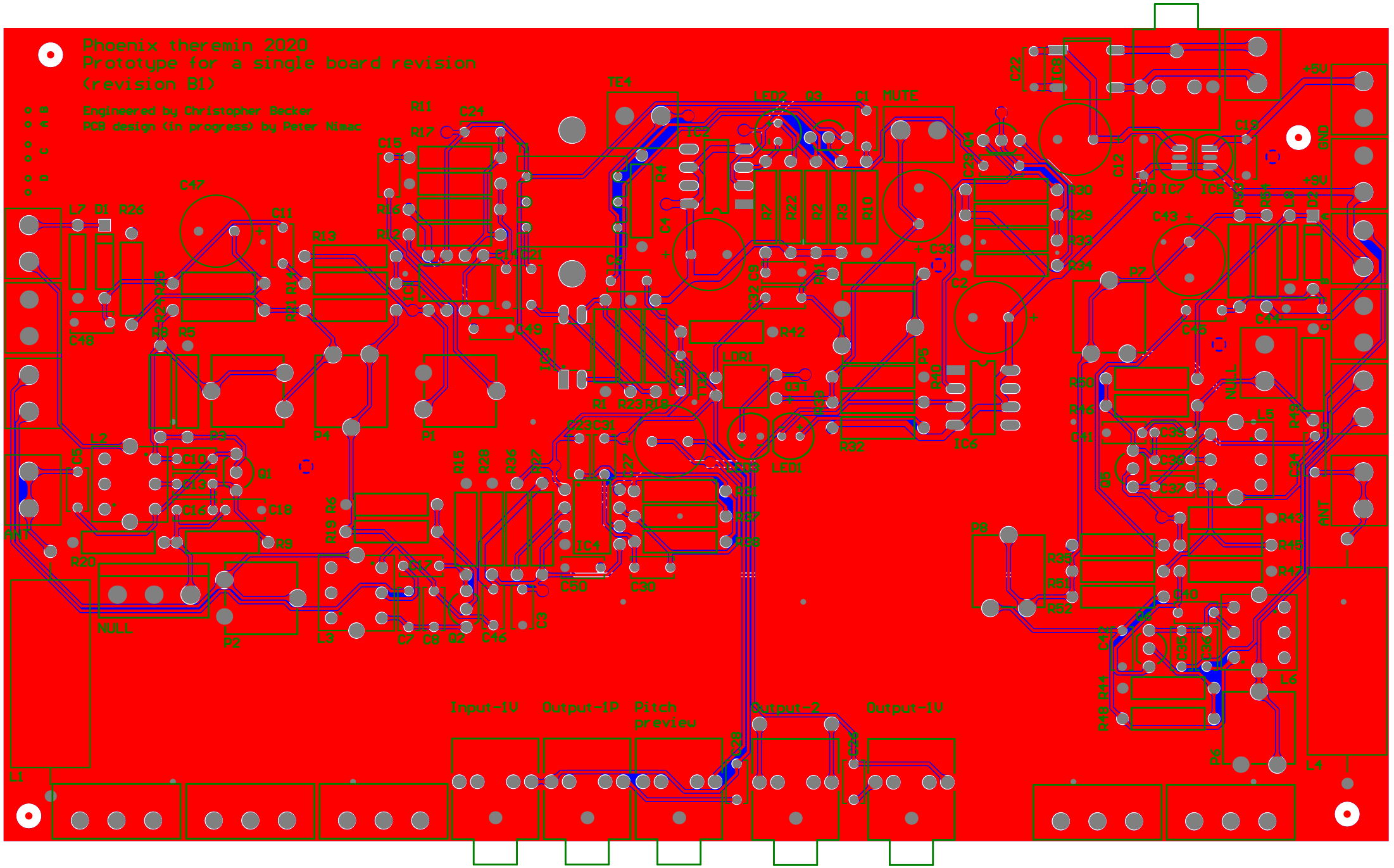

Phone Vol Volume Pitch Waveform Brightness