Opto-VCO

Set Drill File =.031 .052 .0635 .157
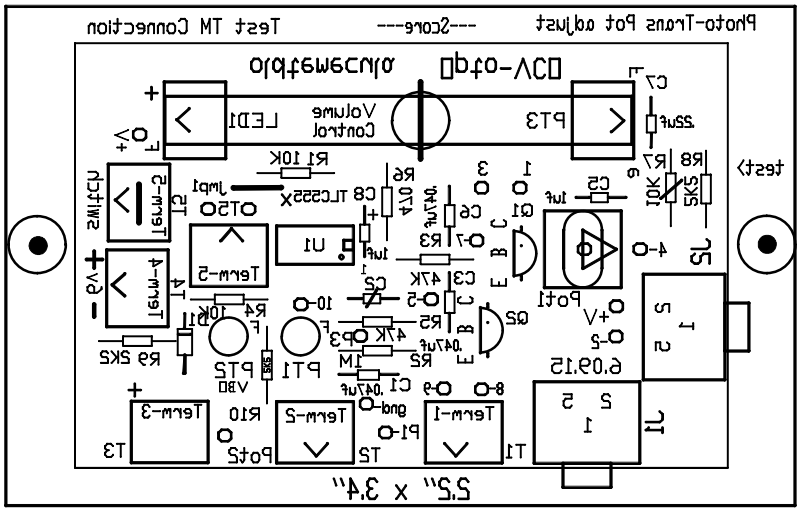
Extend board with another LED/Photo-T